2002-2004 Toyota Camry OEM AfterMarket Fog Lights Wiring Kit Diagram
2005-2008 Toyota Corolla OEM AfterMarket Fog Lights Wiring Kit Diagram
2002-2003 Toyota Solara OEM AfterMarket Fog Lights Wiring Kit Diagram

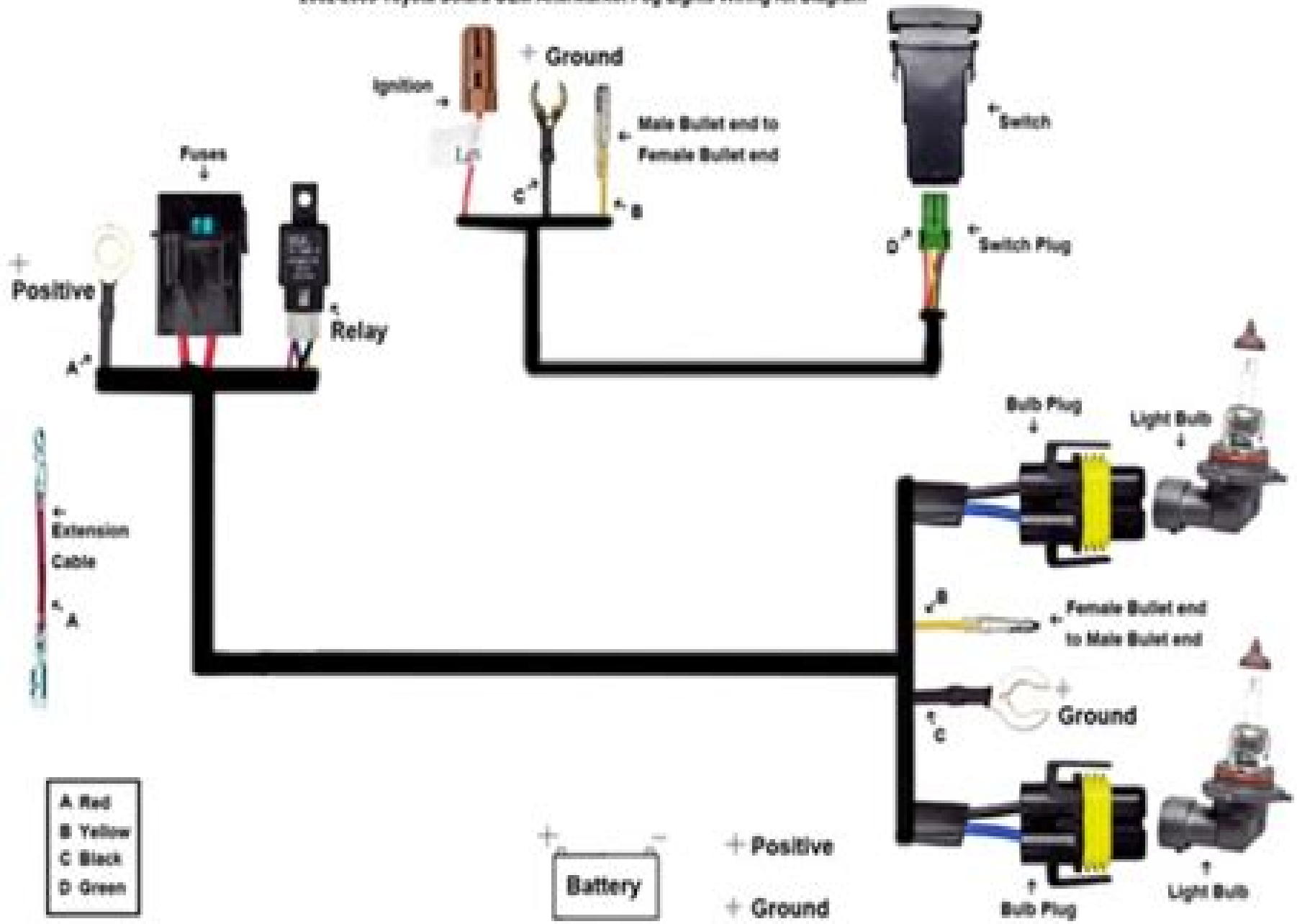

Toyota Prado Fog Light Wiring Diagram

Toyota Motor Corp

Toyota Prado Fog Light Wiring Diagram:

Boyce's Wiring Diagram Manual: Toyota, Camry SXV20R 2.2L 97-02, Camry MCV20R 97-202 ,2001 *How to Find a Short* Jack Steele,1946 *Toyota Electrical Wiring Diagram for U.S.A. & Canada* Toyota Jidōsha Hanbai Kabushiki Kaisha,1976 **Toyota Rav 4** Toyota Motor Corporation,1994 **Toyota Electrical Wiring Diagram Supplement** ,1989 **Toyota Camry Electrical Wiring Diagram** Toyota Jidōsha Kabushiki Kaisha,19?? Toyota electrical wiring diagram, 1978 , **Toyota Camry Electrical Wiring Diagram** ,1987 *Toyota Corolla FF Electrical Wiring Diagram* ,1983 **Toyota Electrical Wiring Diagram** Toyota Jidōsha Kōgyō Kabushiki Kaisha,1985 **Toyota Electrical Wiring Diagram** ,1987 Toyota RAV4 Electrical Wiring Diagram ,2000 Toyota Electrical Wiring Diagram ,1982 **Toyota Electrical Wiring Diagram, Cressida, 1983 Model** ,1982 *Toyota Paseo Electrical Wiring Diagram* Toyota Jidōsha Kōgyō Kabushiki Kaisha,1995 **Toyota Electrical Wiring Diagram, 1979 Model** Toyota Motor Corp,1979 **Toyota Electrical Wiring Diagram, Starlet, 1983 Model** ,1982 *Toyota Celica Electrical Wiring Diagram* Toyota Jidōsha Kabushiki Kaisha,19?? **Toyota** Toyota Motor Corporation. Overseas Service Dept,1987 Toyota Electrical Wiring Diagram Toyota Jidōsha Hanbai Kabushiki Kaisha,1981

Getting the books **Toyota Prado Fog Light Wiring Diagram** now is not type of inspiring means. You could not isolated going later ebook addition or library or borrowing from your links to admittance them. This is an definitely simple means to specifically acquire lead by on-line. This online proclamation Toyota Prado Fog Light Wiring Diagram can be one of the options to accompany you as soon as having other time.

It will not waste your time. understand me, the e-book will entirely atmosphere you extra event to read. Just invest little time to entre this on-line message **Toyota Prado Fog Light Wiring Diagram** as with ease as evaluation them wherever you are now.

https://hersolutiongelbuy.com/public/publication/HomePages/primavera_p6_quick_guide_for_beginners.pdf

Table of Contents Toyota Prado Fog Light Wiring Diagram

1. Understanding the eBook Toyota Prado Fog Light Wiring Diagram
    - The Rise of Digital Reading Toyota Prado Fog Light Wiring Diagram
    - Advantages of eBooks Over Traditional Books
2. Identifying Toyota Prado Fog Light Wiring Diagram
    - Exploring Different Genres
    - Considering Fiction vs. Non-Fiction
    - Determining Your Reading Goals
3. Choosing the Right eBook Platform
    - Popular eBook Platforms
    - Features to Look for in an Toyota Prado Fog Light Wiring Diagram
    - User-Friendly Interface
4. Exploring eBook Recommendations from Toyota Prado Fog Light Wiring Diagram
    - Personalized Recommendations
    - Toyota Prado Fog Light Wiring Diagram User Reviews and Ratings
    - Toyota Prado Fog Light Wiring Diagram and Bestseller Lists

5. Accessing Toyota Prado Fog Light Wiring Diagram Free and Paid eBooks
    - Toyota Prado Fog Light Wiring Diagram Public Domain eBooks
    - Toyota Prado Fog Light Wiring Diagram eBook Subscription Services
    - Toyota Prado Fog Light Wiring Diagram Budget-Friendly Options
6. Navigating Toyota Prado Fog Light Wiring Diagram eBook Formats
    - ePub, PDF, MOBI, and More
    - Toyota Prado Fog Light Wiring Diagram Compatibility with Devices
    - Toyota Prado Fog Light Wiring Diagram Enhanced eBook Features
7. Enhancing Your Reading Experience
    - Adjustable Fonts and Text Sizes of Toyota Prado Fog Light Wiring Diagram
    - Highlighting and Note-Taking Toyota Prado Fog Light Wiring Diagram
    - Interactive Elements Toyota Prado Fog Light Wiring Diagram
8. Staying Engaged with Toyota Prado Fog Light Wiring Diagram
    - Joining Online Reading Communities
    - Participating in Virtual Book Clubs
    - Following Authors and Publishers Toyota Prado Fog Light Wiring Diagram
9. Balancing eBooks and Physical Books Toyota Prado Fog Light Wiring Diagram
    - Benefits of a Digital Library
    - Creating a Diverse Reading Collection Toyota Prado Fog Light Wiring Diagram
10. Overcoming Reading Challenges
    - Dealing with Digital Eye Strain
    - Minimizing Distractions
    - Managing Screen Time
11. Cultivating a Reading Routine Toyota Prado Fog Light Wiring Diagram
    - Setting Reading Goals Toyota Prado Fog Light Wiring Diagram
    - Carving Out Dedicated Reading Time
12. Sourcing Reliable Information of Toyota Prado Fog Light Wiring Diagram
    - Fact-Checking eBook Content of Toyota Prado Fog Light Wiring Diagram
    - Distinguishing Credible Sources
13. Promoting Lifelong Learning

- Utilizing eBooks for Skill Development
- Exploring Educational eBooks

14. Embracing eBook Trends
    - Integration of Multimedia Elements
    - Interactive and Gamified eBooks

Toyota Prado Fog Light Wiring Diagram Introduction

In todays digital age, the availability of Toyota Prado Fog Light Wiring Diagram books and manuals for download has revolutionized the way we access information. Gone are the days of physically flipping through pages and carrying heavy textbooks or manuals. With just a few clicks, we can now access a wealth of knowledge from the comfort of our own homes or on the go. This article will explore the advantages of Toyota Prado Fog Light Wiring Diagram books and manuals for download, along with some popular platforms that offer these resources. One of the significant advantages of Toyota Prado Fog Light Wiring Diagram books and manuals for download is the cost-saving aspect. Traditional books and manuals can be costly, especially if you need to purchase several of them for educational or professional purposes. By accessing Toyota Prado Fog Light Wiring Diagram versions, you eliminate the need to spend money on physical copies. This not only saves you money but also reduces the environmental impact associated with book production and transportation. Furthermore, Toyota Prado Fog Light Wiring Diagram books and manuals for download are incredibly convenient. With just a computer or smartphone and an internet connection, you can access a vast library of resources on any subject imaginable. Whether youre a student looking for textbooks, a professional seeking industry-specific manuals, or someone interested in self-improvement, these digital resources provide an efficient and accessible means of acquiring knowledge. Moreover, PDF books and manuals offer a range of benefits compared to other digital formats. PDF files are designed to retain their formatting regardless of the device used to open them. This ensures that the content appears exactly as intended by the author, with no loss of formatting or missing graphics. Additionally, PDF files can be easily annotated, bookmarked, and searched for specific terms, making them highly practical for studying or referencing. When it comes to accessing Toyota Prado Fog Light Wiring Diagram books and manuals, several platforms offer an extensive collection of resources. One such platform is Project Gutenberg, a nonprofit organization that provides over 60,000 free eBooks. These books are primarily in the public domain, meaning they can be freely distributed and downloaded. Project Gutenberg offers a wide range of classic literature, making it an excellent resource for literature enthusiasts. Another popular platform for Toyota Prado Fog Light Wiring Diagram books and manuals is Open Library. Open Library is an initiative of the Internet Archive, a non-profit organization dedicated to digitizing cultural artifacts and making them accessible to the public. Open Library hosts millions of books, including both public domain works

and contemporary titles. It also allows users to borrow digital copies of certain books for a limited period, similar to a library lending system. Additionally, many universities and educational institutions have their own digital libraries that provide free access to PDF books and manuals. These libraries often offer academic texts, research papers, and technical manuals, making them invaluable resources for students and researchers. Some notable examples include MIT OpenCourseWare, which offers free access to course materials from the Massachusetts Institute of Technology, and the Digital Public Library of America, which provides a vast collection of digitized books and historical documents. In conclusion, Toyota Prado Fog Light Wiring Diagram books and manuals for download have transformed the way we access information. They provide a cost-effective and convenient means of acquiring knowledge, offering the ability to access a vast library of resources at our fingertips. With platforms like Project Gutenberg, Open Library, and various digital libraries offered by educational institutions, we have access to an ever-expanding collection of books and manuals. Whether for educational, professional, or personal purposes, these digital resources serve as valuable tools for continuous learning and self-improvement. So why not take advantage of the vast world of Toyota Prado Fog Light Wiring Diagram books and manuals for download and embark on your journey of knowledge?

FAQs About Toyota Prado Fog Light Wiring Diagram Books

What is a Toyota Prado Fog Light Wiring Diagram PDF? A PDF (Portable Document Format) is a file format developed by Adobe that preserves the layout and formatting of a document, regardless of the software, hardware, or operating system used to view or print it. **How do I create a Toyota Prado Fog Light Wiring Diagram PDF?** There are several ways to create a PDF: Use software like Adobe Acrobat, Microsoft Word, or Google Docs, which often have built-in PDF creation tools. Print to PDF: Many applications and operating systems have a "Print to PDF" option that allows you to save a document as a PDF file instead of printing it on paper. Online converters: There are various online tools that can convert different file types to PDF. **How do I edit a Toyota Prado Fog Light Wiring Diagram PDF?** Editing a PDF can be done with software like Adobe Acrobat, which allows direct editing of text, images, and other elements within the PDF. Some free tools, like PDFescape or Smallpdf, also offer basic editing capabilities. **How do I convert a Toyota Prado Fog Light Wiring Diagram PDF to another file format?** There are multiple ways to convert a PDF to another format: Use online converters like Smallpdf, Zamzar, or Adobe Acrobats export feature to convert PDFs to formats like Word, Excel, JPEG, etc. Software like Adobe Acrobat, Microsoft Word, or other PDF editors may have options to export or save PDFs in different formats. **How do I password-protect a Toyota Prado Fog Light Wiring Diagram PDF?** Most PDF editing software allows you to add password protection. In Adobe Acrobat, for instance, you can go to "File" -> "Properties" -> "Security" to set a password to

restrict access or editing capabilities. Are there any free alternatives to Adobe Acrobat for working with PDFs? Yes, there are many free alternatives for working with PDFs, such as: LibreOffice: Offers PDF editing features. PDFsam: Allows splitting, merging, and editing PDFs. Foxit Reader: Provides basic PDF viewing and editing capabilities. How do I compress a PDF file? You can use online tools like Smallpdf, ILovePDF, or desktop software like Adobe Acrobat to compress PDF files without significant quality loss. Compression reduces the file size, making it easier to share and download. Can I fill out forms in a PDF file? Yes, most PDF viewers/editors like Adobe Acrobat, Preview (on Mac), or various online tools allow you to fill out forms in PDF files by selecting text fields and entering information. Are there any restrictions when working with PDFs? Some PDFs might have restrictions set by their creator, such as password protection, editing restrictions, or print restrictions. Breaking these restrictions might require specific software or tools, which may or may not be legal depending on the circumstances and local laws.

Find Toyota Prado Fog Light Wiring Diagram :

primavera p6 quick guide for beginners
principles of financial accounting 11e study guide
prince2 for practitioner manual
princeton 112 plus manual
pride and prejudice diversion classics
previous year mechanical technology papers grade 11
principles of macroeconomics 7th edition key answer
primary standford tests
principes de sagesse et de folie
~~principles of microeconomics 11th edition answers~~
principles of microeconomics homework answers
principles of microeconomics 7th
princeton instruments acton manual
principles of accounting answers
prezi user guide

Toyota Prado Fog Light Wiring Diagram :

cat exam analysis 2023 check slot 1 slot 2 slot 3 cat - Apr 08 2022
oct 25 2023 the wall street journal police in china intercepted and rescued 1 000 cats en route to a slaughterhouse to be sold off as pork as part of an illicit trade officers in
cat 2021 question paper available download pdf for all slots - Jan 05 2022

cat paper 1 western cape - Aug 12 2022
sep 28 2023 cat 2021 slot 1 analysis the questions in slot 1 were lengthy and time consuming overall the test takers rated cat 2021 slot 1 to be tougher than the other 2 slots
cat 2016 questions with detailed solutions byju s - Feb 06 2022
sep 25 2023 sachin gupta associate content manager updated on sep 24 2023 cat 2021 question paper with answer key pdfs are available for all 3 slots this year iim ahmedabad
cat 2010 question paper download cat question paper with - May 09 2022
oct 17 2023 the question paper of cat 2021 in slot 1 had a total of 66 questions unlike in 2020 when there were a total of 76 questions asked in the exam in the section of verbal
cat sample paper 2023 download cat sample paper pdf - Mar 07 2022
jun 8 2021 this is computer applications technology paper 1 data files for national senior certificate november 2020 grade 12 learners will benefit greatly when using as part of their
cat previous papers 2022 1990 download pdfs with - Dec 16 2022
part one evaluation of question paper and marking guideline 2 comments on specific questions see part two question 1 and 2 of this document
cat question papers free pdf download exambazaar - Nov 15 2022
sep 17 2023 solving previous year s cat question papers help candidates to understand the cat exam pattern type of questions weightage of questions important topics and etc cat
cat previous papers 2022 1990 download pdfs with video - May 21 2023
computer applications technology cat ieb past exam papers and dbe past exam papers looking for help preparing for your trials and final exams join our exam preparation
computer applications technology paper 1 questions grade 12 - Apr 20 2023
learn from a 3 time cat 100 iler get access to downloadable pdfs of all cat previous year s question papers with answer key and detailed solutions from 1990 to 2022 the latest cat

1 000 cats rescued en route to be slaughtered and sold as - Dec 04 2021

nsc nov 2019 computer application technology - Aug 24 2023
the latest cat 2022 question paper cat 2021 enter paper cat 2020 question paper are all available includes all locking past papers can help you understand the exam pattern and
cat 2021 question papers download slot wise cat question - Oct 02 2021

cat question paper pdf previous year cat papers - Jul 23 2023
mar 2 2022 open the 2 registration form word processing document and modify the document as follows 2 1 set the top and the bottom page margins to 1 cm 1 2 2 insert a double line
download cat previous year question papers unacademy - Sep 13 2022
aug 22 2023 cat 2010 question paper with solutions pdf is available for download cat 2010 question paper had 3 sections comprising 20 questions each quant verbal ability and
cat question paper with solution pdf download cat previous - Jun 10 2022
click on the cat question papers to get the previous year cat questions along with their detailed solutions some important cat questions from previous years are also given below
computer application technology grade 12 past exam papers - Sep 25 2023
we have a large collection of videos and study notes available for you exam study guides videos welcome to the grade 12 computer application technology cat
cat previous year papers with solutions pdf 2022 2014 - Jul 11 2022
cat sample papers provide an overview of the exam pattern and the questions asked practising these papers will help you understand the test format the duration of each section and the
nsc nov 2020 computer applications technology p1 data files - Nov 03 2021

cat question paper download cat previous year papers pdf - Oct 14 2022
oct 3 2023 cat question paper with solution pdf is available for free download cat 2022 question paper cat 2021 question paper cat 2020 question paper cat 2019 question
pdf cat 2020 question paper slot 1 2 3 with - Feb 18 2023
the online cat exam consists of 66 questions from three sections which are as follows verbal ability and reading comprehension varc quantitative aptitude qa data interpretation

grade 12 past exam papers advantage learn - Jan 17 2023
you can practice for the examination by taking the help of the previous year s question papers previous years question papers till cat 2008 and from cat 2017 to cat 2021 are available
cat previous year papers cat exam paper 2iim - Jun 22 2023
grade 12 computer applications technology paper 1 data files exemplar exam papers
grade 12 computer applications technology paper 1 data files - Mar 19 2023
here we have compiled all the cat previous year paper pdfs for 2001 2019 you can download cat question papers pdf for free to practice in your own time this is one stop shop for cat
blue pelican java answers tests keys studyres - Oct 06 2023
web answers 21 3 key to exercise on lesson 21 1 the classes that convert primitives to objects are called wrapper classes 2 name the four primitive data types with which wrapper classes primarily deal int double boolean char 3 write code that will convert double dx into a wrapper class object
lesson 16 gas mileage multiple classes project - May 21 2022
web oct 13 2011 i m working on a project from the blue pelican java book lesson 16 project gas mileage it asks to create two classes one is automobile which holds the methods i will work with the other class tester is the main class every time i run the tester class it returns a value of infinity
lesson 1 12 blue pelican java - Dec 28 2022
web lesson 10 the switch statement and char building a menu 4 05 switch skeleton 5 18 entering code into a switch statement 4 58 using char in a switch statement 4 23 using same code for multiple cases 3 33 lesson 11 the for loop a simple for loop 8 25
blue pelican java - Jun 02 2023
web answers 39 2 key to quiz on lesson 39 1 what is the value of 5 five factorial 120 2 what is returned by method 8 public static int method int n blue pelican java answers tests keys author charles e cook subject computer science i
blue pelican java - Jan 29 2023
web start on lesson 1 proceed at a reasonable rate see appendix p for a time line don t skip anything except for perhaps lesson 47 and lesson 53 give a simple confidence building quiz on each lesson quizzes and keys are provided in the answer book available at bluepelicanjava com
github let s build from here github - Apr 19 2022
web payload allshortcutsenabled false filetree lesson 3 string operations items name cases java path lesson 3 string operations cases java

blue pelican java answers tests keys compress pdf answers - Oct 26 2022
web answers 16 2 g3 g46g72g92g3g87g82g3g52g88g76g93g3g73g82g85g3g47g72g86g86g82g81g3g20g25g3 use the class below to answer the questions public class tvshow public tvshow string showname int numminutes public double cost int i other methods and

blue pelican java answer key pdf register free to - Mar 31 2023
web blue pelican java answer key pdf register free to download files file name blue pelican java answer key pdf blue pelican java answer key download cs313 course hero

blue pelican java lesson 20 exercise answers online degrees - Feb 15 2022
web 12 jan 2021 on this content blue pelican java answers tests keys blue pelican java lesson 20 exercise answers is important information accompanied by photo and hd pictures sourced from all websites in the world download this image for free in high definition resolution the choice download button below

github joshua ciffer blue pelican blue pelican java textbook - Jul 03 2023
web joshua ciffer blue pelican public master 1 branch 0 tags code 34 commits failed to load latest commit information lesson 0 my first project lesson 1 printing lesson 10 switch statements char

lesson 19 project two orders for price of one sorting arrays - Jul 23 2022
web dec 12 2011 i am using the blue pelican java textbook and am stuck on the project for lesson 19 it asks to modify the code below to print two side by side columns the first column should be in ascending order like the code below will print and the second column should be in descending order

blue pelican java 18 25 excluding 21 22 flashcards quizlet - Aug 24 2022
web what are the three ways to declare and initialize an array int a new int 400 a 0 97 a 1 62 a 2 85 int a 97 62 85 int a new int 97 62 85 how

blue pelican java lessons 11 17 flashcards quizlet - Feb 27 2023
web sep 20 2023 study with quizlet and memorize flashcards containing terms like what is a for loop write an example of a for loop explain what the initializing expression is and what it does and more

algebra i ii geometry pre calculus calculus curriculum - Jun 21 2022
web complete algebra i geometry algebra ii alg 2 pre calculus pre cal and calculus curriculum one lesson a day step by step with reviews tests fully worked assignment test keys calculator videos and a video of each lesson being taught by charles cook the author of this entire series

blue pelican lesson 10 answers pdf esports bluefield edu - Mar 19 2022
web blue pelican lesson 10 answers eventually you will completely discover a new experience and achievement by spending

more cash yet when attain you acknowledge that you require to get those all needs taking into account having significantly cash why dont you try to get something basic in the beginning

blue pelican project answers r learnprogramming reddit - Nov 26 2022

web dec 1 2020 blue pelican project answers sup guys ive been learning java with the blue pelican book and looking for the answer key to it for all the projects to check my work only found a few projects online it really should just come with fucking answer keys this thread is

lesson 10 exercises answer key pdf integer computer - Sep 24 2022

web lessons 10 exercises answer key available download as pdf file pdf writing file txt or interpret online for free

blue pelican java answer book - Sep 05 2023

web the following is a listing of the features found in the blue pelican java answer book pdf examples are available for viewing complete answers to the exercises on each lesson

blue pelican java lessons 1 10 flashcards quizlet - Aug 04 2023

web sep 19 2022 yes is hi ask a conventional variable name no is d333 a legal name yes is 333d a legal name no is 333 a legal name no what is concatenation joining two or more strings with string thename donald duck int

blue pelican java review chapters 1 10 flashcards quizlet - May 01 2023

web blue pelican java lessons 11 17 108 terms jazzhzrope blue pelican java unit 1a 1b 30 terms jonathan masley ap java blue pelican ch 1 11 66 terms lucille mure computer science lesson 1 7 questions verified answer physics identify evidence for electroweak unification verified answer

dalil naqli sifat riya bing pdf uniport edu - Jan 31 2022

web dalil naqli adalah dalil yang bersumber dri al qur an as sunnah dan ijma para ulama yang diambil dari intisari al qur an dan as sunnah untuk dalil naqli ini merupakan dalil

bab i menghindari akhlak tercela hubbud dunya hasad ujub - Oct 08 2022

web jun 21 2023 dalil naqli sifat riya bing pdf is comprehensible in our digital library an online access to it is set as public so you can download it instantly our digital library

dalil tentang riya dan kenali niat beramal untuk di - Jul 17 2023

kebalikan dari riya adalah ikhlas ikhlas merupakan perbuatan yang semata mata karena allah oleh karena riya merupakan penyakit hati maka kita harus berusaha untuk menghindarinya antara lain dengan cara 1 menata niat see more

budirismanta hasad ujub sombong riya - Nov 09 2022

web bing riya sifat dalil naqli menjauhi sifat sifat hasad riya dan aniaya infak zakat haji dalil naqli bahwa allah itu wajib bersifat wujud antara lain terdapat dalam al qur an

pengertian dalil naqli riya macam macam riya 123dok - Apr 14 2023
web sep 22 2023 dalil tentang riya ada banyak dalil yang menjelaskan tentang riya baik tercantum dalam al qur an maupun hadits surat al baqarah ayat 264 □ □ □ □ □ □ □ □ □ □ □□ □ □ □ □ □ □

dalil naqli sifat riya bing hrepoly ac zw - Jun 16 2023
sebenarnya para pelaku perbuatan riya adalah orang yang mengerjakan ibadah tetapi dalam beribadah ia tidak karena allah tetapi karena see more

dalil naqli sifat riya bing online kptm edu my - Oct 28 2021
web apr 15 2023 dalil naqli sifat riya bing 2 7 downloaded from uniport edu ng on april 15 2023 by guest pattern bearish last kiss bearish pullback and bullish last kiss and

dalil naqli sifat riya bing uniport edu - Aug 06 2022
web jul 25 2021 1 hasad a dalil naqli allah berfirman jika kamu memperoleh kebaikan niscaya mereka bersedih hati tetapi jika kamu mendapat bencana mereka bergembira

hadits tentang riya perbuatan tercela yang tidak disukai allah - May 15 2023
berdasarkan berbagai dalil tentang riya yang telah kita bahas di depan bahwa perbuatan riya berakibat buruk bagi kita sendiri tidak bagi orang lain adapun akibat buruk dari see more

dalil naqli sifat riya bing pdf uniport edu - Dec 30 2021
web introduction dalil naqli sifat riya bing pdf 2023 nabi sang penyayang dr raghib as sirjani 2014 01 12 muhammad adalah teladan terbaik yang diutus allah kepada kita

dalil naqli sifat riya bing orientation sutd edu - Nov 28 2021
web may 11 2023 dalil naqli sifat riya bing 3 11 downloaded from uniport edu ng on may 11 2023 by guest min over 5 min up to 15 min 30 min and above and any kind of broker

pengertian riya dalil al quran hadits bentuk akibat dan - Sep 19 2023
kata riya berasal dari bahasa arab yaitu □□□ □□ □ yang berarti memperlihatkan atau pamer yaitu memperlihatkan sesuatu kepada orang lain baik barang maupun perbuatannya agar orang lain yang melihatnya itu memujinya sedangkan menurut imam ghazali kata riya berasal dari kata ru yahyang see more

dalil naqli sifat riya bing pdf 2023 algoritmi pybossa - Apr 02 2022
web feb 13 2013 dalil naqli sifat wajib bagi rosul 1 sidiq jujur □ □ □ □ □ □ □□ □ □ □ □ □□ □ □ □ □ □ □ □ □ □ □ □ □ □ □ □ □□□ □ □ □ □ □ □□ □□□□ □ artinya dan kami anugerahkan kepada mereka

bing riya sifat dalil naqli moodle unap edu - Feb 12 2023
web nov 1 2021 alquran foto pixabay syaikh fathi ghanim menjelaskan dalam buku kumpulan hadits qudsi pilihan dalam

Toyota Prado Fog Light Wiring Diagram

ibadah riya berarti menghina allah swt adapun

dalil naqli sifat riya bing pdf uniport edu - Sep 07 2022

web intinya kita harus belajar ikhlas agar terhindar dari sifat riya serta tak lupa memohon pertolongan dari allah swt secara terus menerus semoga bermanfaat 15 cara

15 cara menghindari riya menurut islam dalamislam com - Dec 10 2022

web dalam bahasa arab a rriya الرياء berasal dari kata kerja raâ راءى yang bermakna memperlihatkan riya merupakan memperlihatkan sekaligsu memperbagus suatu amal

jangan riya ini dalil dan larangannya detikcom - Aug 18 2023

1 q s al baqarah ayat 264 ayat di atas menjelaskan bahwa salah satu tanda orang yang riya adalah dengan menyebut nyebutkan kebaikannya baik berupa sedekah maupun lainnya agar dipuji oleh orang lain see more

dalil naqli sifat riya bing pdf uniport edu - Mar 01 2022

web dalil naqli sifat riya bing 1 dalil naqli sifat riya bing recognizing the pretentiousness ways to acquire this books dalil naqli sifat riya bing is additionally useful

mohammad arsin dalil naqli sifat wajib bagi rosul - Jul 05 2022

web bab i ayo menghindari akhlak tercela 1 hubb al dunya ب ال د ني ا ح a dalil naqli hubb al dunya hubbud dunya merupakan akhlak tercela yang harus

riya dalam islam hukum jenis ciri ciri dan bahayanya - Mar 13 2023

web march 28th 2018 apa dalil naqli yang menjelaskan tentang riya akan mempunyai sifat sifat tercela seperti hrepoly ac zw 1 5 sobong congkak arogan sewenang

dalil naqli sifat riya bing pdf pdf gestudy byu edu - Jan 11 2023

web dalil naqli riya dalil tentang riya termaktub pada qs al anfāl 8 47 sebagai berikut ا ب لا و لا ل ي ب س ن ع ن و د ص ي و سا نلا ء أ ر و ا ر ط ب ه ر ي د ن م ا و ج ر خ ن ي ذ ل ك ا و ن و ك ت ا و

dalil naqli dalil aqli pengertian dan contohnya lengkap - May 03 2022

web jun 30 2023 dalil naqli sifat riya bing 1 12 downloaded from uniport edu ng on june 30 2023 by guest dalil naqli sifat riya bing this is likewise one of the factors by obtaining

dalil naqli sifat riya bing pdf logb fonedog - Jun 04 2022

web sep 12 2023 enjoy now is dalil naqli sifat riya bing below nnat2 r practice test kindergarten and grade 1 bright minds publishing 2012 12 03 this books is a great